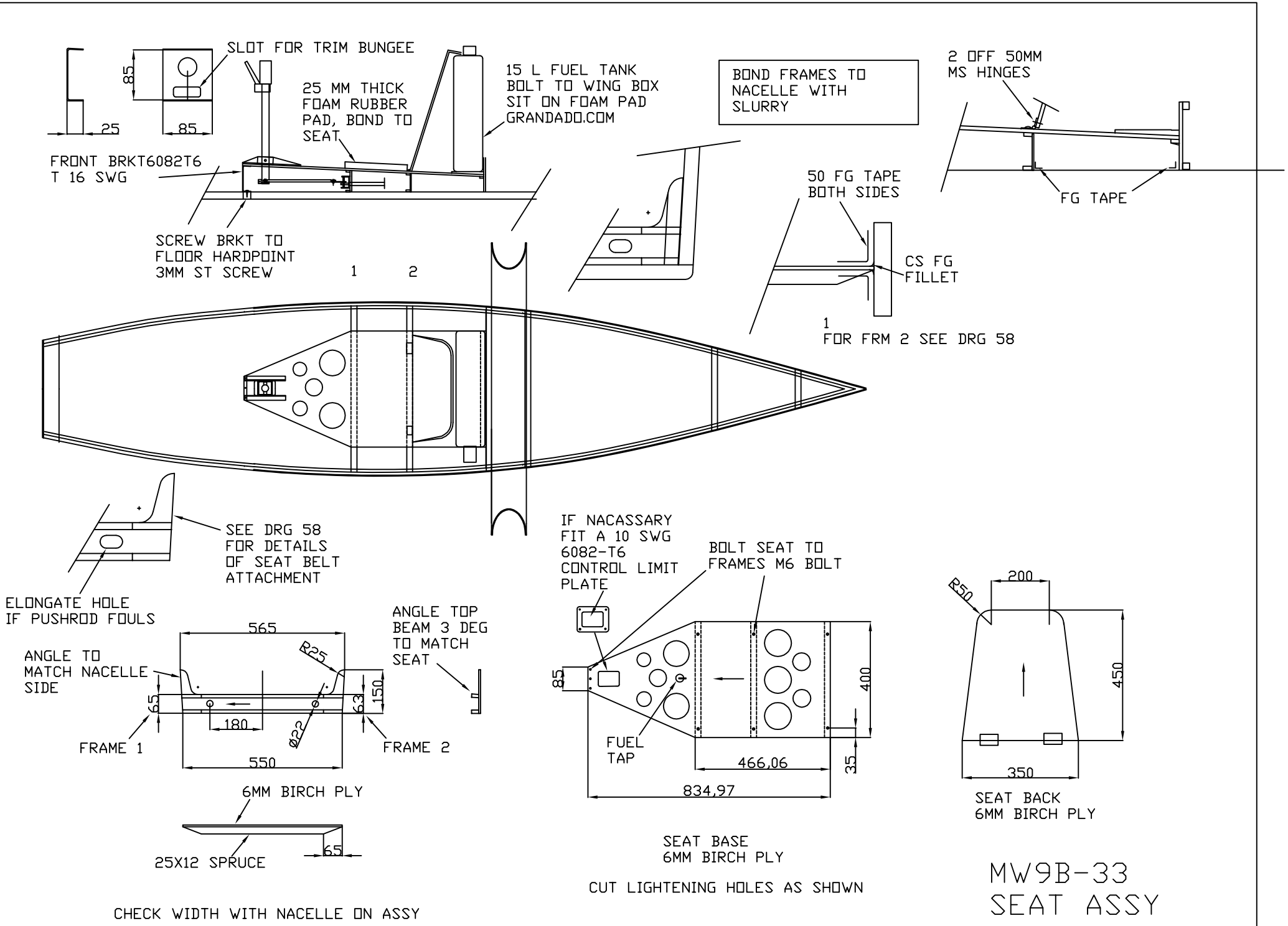
SLOT FOR TRIM BUNGEE
85
25
85
25 MM THICK FOAM RUBBER PAD, BOND TO SEAT
15 L FUEL TANK BOLT TO WING BOX SIT ON FOAM PAD GRANDADO.COM
BOND FRAMES TO NACELLE WITH SLURRY
2 OFF 50MM MS HINGES
FG TAPE
FRONT BRKT6082T6 T 16 SWG
SCREW BRKT TO FLOOR HARDPOINT 3MM ST SCREW
1
2
50 FG TAPE BOTH SIDES
CS FG FILLET
1
FOR FRM 2 SEE DRG 58
SEE DRG 58 FOR DETAILS OF SEAT BELT ATTACHMENT
ELONGATE HOLE IF PUSHROD FOULS
IF NACASSARY FIT A 10 SWG 6082-T6 CONTROL LIMIT PLATE
BOLT SEAT TO FRAMES M6 BOLT
ANGLE TOP BEAM 3 DEG TO MATCH SEAT
ANGLE TO MATCH NACELLE SIDE
565
R25
65
63
150
180
Ø22
FRAME 1
FRAME 2
550
6MM BIRCH PLY
25X12 SPRUCE
65
CHECK WIDTH WITH NACELLE ON ASSY
85
400
FUEL TAP
466,06
35
834,97
SEAT BASE
6MM BIRCH PLY
CUT LIGHTENING HOLES AS SHOWN
R50
200
450
350
SEAT BACK
6MM BIRCH PLY
MW9B-33
SEAT ASSY